Atlantis headwearevolution

**TECHNICAL DATA SHEET**

Code: **REFS**

# REFLECT



Baseball shape made of recycled polyester with reclective piping on visor and closure for high visibility when it's dark. It features a curved visor, a buckle with sewn hole at the back and an eco-friendly water resistant treatment.

## Technical details

**Composition:** 100% polyester

**Fabric:** Main Fabric: 100% Recycled Polyester Twill

**Main Fabric Weight:** 200 gsm

**Packing:** 24 x 144

**Piping:** Reflect piping on closure

**Size:** One size fits all

**Circumference:** 58-58,5 cm

**Eyelets:** 6 Sewn eyelets on crown areas

**Made in:** China

**Others:** Button

**Panels:** 5 Panels / front_panel stitching

**Product Weight Kg:** 0,080

**Visor:** 6 rows / Reflect piping on bill / Curved Visor

**Customs code:** 6505.00.30

**RECYCLED BUCKRAM**
Recycled lamination on front panels to maintain the shape with a slightly higher crown.

**WATER RESISTANT - PFC FREE**
WR-PFC free it's our water-resistant treatment that keeps our caps dry, without environmental harmful components.

**SELF FABRIC SWEATBAND**
Sweatband in same fabric as cap, enhanced by 4 rows on front, closed on back with a tape.

**RECYCLED POLYESTER**
Fiber made from polymers obtained by recycling plastic bottles.

**RECYCLED REFLECTIVE FABRIC**
This fabric increase your visibility & safety in low light conditions. Made of recycled material, our sustainable choice.

**Retraze Recycled Visor**
Internal visor made of 100% recycled plastic (PE), made in partnership with ReTraze®. Starting with the 2024 productions.

## Where to customize

*Centimeters*

| | Front | Back | Closure | Right | Left |
|---|---|---|---|---|---|
| Print | - | - | 6 x 1,2 | 6 x 5 | 6 x 5 |
| Embroidery | 12 x 6 | 8 x 3,5 | 6 X 1,2 | 10 x 6 | 10 x 6 |
| Heat transfer | - | - | - | 6 x 4 | 6 x 4 |

## Washing instruction

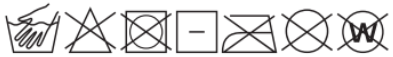

Hand wash/ do not bleach/ do not dry by tumble dryers/ dry flat/ do not iron/ do not dry clean/ do not professional wet clean

## Technical Size (cm)

**2.** 7.5
**3.** 16.0
**4.** 18.0
**5.** 8.5
**6.** 33.0
**7.** 8.0
**8.** 1..8
**9.** 5.5

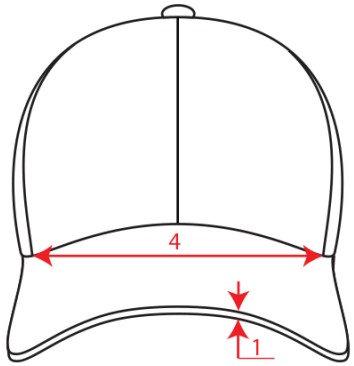


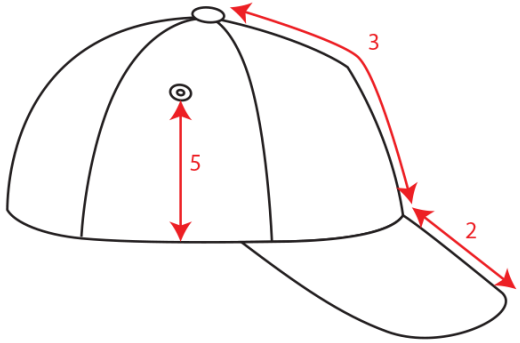


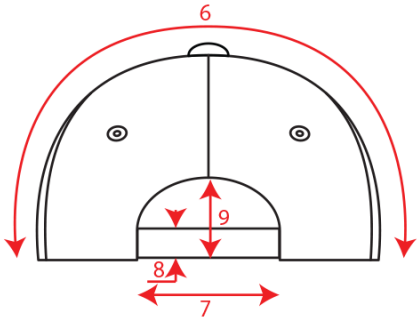


## Color variants ( TPX / Pantone )

### BLACK



**SWEATBAND:** 19-4006 / BLACK-6-C
**TAPING:** 19-4006 / BLACK-6-C
**HAT:** 19-4006 / BLACK-6-C
**PIPING:** 17-5102 / 877-C

### NAVY



**SWEATBAND:** 19-4009 / 533-C
**TAPING:** 19-4009 / 533-C
**HAT:** 19-4009 / 533-C
**PIPING:** 17-5102 / 877-C

### RED



**SWEATBAND:** 19-1762 / 193-C
**TAPING:** 19-1762 / 193-C
**HAT:** 19-1762 / 193-C
**PIPING:** 17-5102 / 877-C

### ROYAL



**SWEATBAND:** 19-3964 / 3597-C
**TAPING:** 19-3964 / 3597-C
**HAT:** 19-3964 / 3597-C
**PIPING:** 17-5102 / 877-C