KAI



Casual all-around hat made of recycled polyester and elastane. It features a mid visor, recycled dry-tech sweatband and a HQ hook&loop closure with elastic and buckle.

Technical details

Composition: 97% polyester 3% elastane

Fabric: Main Fabric: 97% Recycled Polyester 3% Elastane

Made in: China

Others: Stretchable / Button

Panels: 6 Panels

SHAPE: Soft crown

Visor: 6 rows / Mid Visor / Retraze Recycled Visor

Customs code: 6505.00.30

Eyelets: 6 Sewn eyelets on crown areas

Lining: Recycled lamination on front panels

Main Fabric Weight: 195 gsm

Packing: 24 x 144

Product Weight Kg: 0,065

Size: One size fits all

Circumference: 58-58,5 cm

STRETCHABLE FABRIC
It is a mix of fabric, in which the main material is combined with a few percentage of elastane, for an absolute confortable and perfect fitting.

RECYCLED DRY-TECH SWEATBAND
Elastic sweatband, made by recycled material, enhanced by a quick dry function and antibacterial properties.

UV PROTECTION
Fabrics that offer a 50+ protection from the ultraviolet rays of the sun.

WATER RESISTANT - PFC FREE
WR-PFC free it's our water-resistant treatment that keeps our caps dry, without environmental harmful components.

RECYCLED POLYESTER
Fiber made from polymers obtained by recycling plastic bottles.

Retraze Recycled Visor
Internal visor made of 100% recycled plastic (PE), made in partnership with ReTraze®. Starting with the 2024 productions.

Where to customize

Centimeters

	Front	Back	Closure	Right	Left
Print	-	-	6 x 1,2	6 x 5	6 x 5
Embroidery	12 x 6	8 x 3,5	3 x 1	10 x 6	10 x 6
Heat transfer	-	-	-	6 x 4	6 x 4

Washing instruction

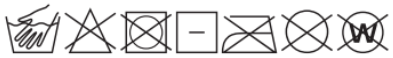

Hand wash/ do not bleach/ do not dry by tumble dryers/ dry flat/ do not iron/ do not dry clean/ do not professional wet clean

Technical Size (cm)

2. 7.0
3. 16.5
4. 18.5
5. 9
6. 33.5
7. 9
8. 2
9. 6.5

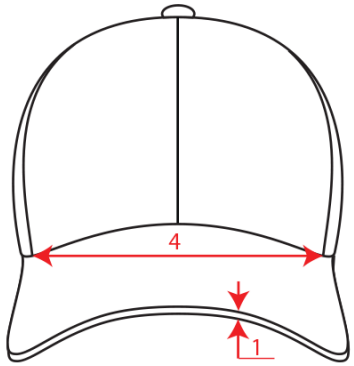

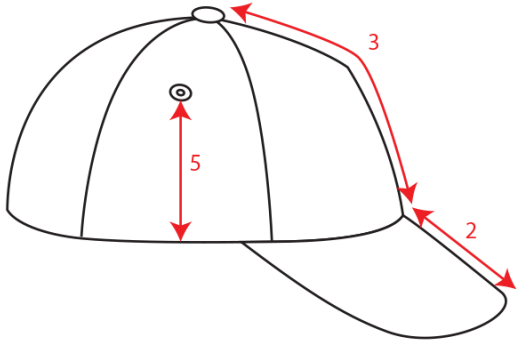

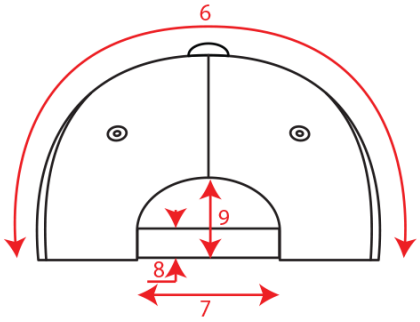

Color variants (TPX / Pantone)

WHITE

SWEATBAND: 19-4006 / 426-C
TAPING: 11-0601 / WHITE
HAT: 11-0601 / WHITE

DARK-GREY



SWEATBAND: 19-4006 / 426-C
TAPING: 19-4006 / BLACK-6-C
HAT: 19-3906 / COOL-GRAY-11-C

BLACK



SWEATBAND: 19-4006 / 426-C
TAPING: 19-4006 / BLACK-6-C
HAT: 19-4005 / BLACK-C

NAVY



SWEATBAND: 19-4006 / 426-C
TAPING: 19-4006 / BLACK-6-C
HAT: 19-3920 / 533-C

SAGE



SWEATBAND: 19-4006 / 426-C
TAPING: 19-4006 / BLACK-6-C
HAT: 16-5907 / 4185-C