RECY FIVE



Classic structured five panel baseball cap made of 100% certified recycled polyester. Full prostitching, curved visor and 4 eyelets.

Technical details

Composition: 100% polyester

Fabric: Main Fabric: 100% Recycled Polyester Twill

Main Fabric Weight: 220 gsm

Packing: 50 x 200

Product Weight Kg: 0,060

Visor: 6 rows / Curved Visor

Customs code: 6505.00.30

Eyelets: 4 Sewn eyelets on side & back areas

Made in: China

Others: Button

Panels: 5 Panels / full stitching

Size: One size fits all

Circumference: 58-58,5 cm

CURVED VISOR
Our visors are made with a technology that maintains a proper curved shape at all times.

HOOK&LOOP CLOSURE
Adjustable back closure with hook&loop strap, suitable for any fit.

STRUCTURED FRONT PANEL
Bonded fabric for a structured construction that keeps the shape with a slightly higher crown.

RECYCLED POLYESTER
Fiber made from polymers obtained by recycling plastic bottles.

5 PANELS

IDEALE PER LA STAMPA
SUITABLE FOR PRINT

Where to customize

Centimeters

	Front	Back	Closure	Right	Left
Print	12 x 6	-	-	6 x 5	6 x 5
Embroidery	12 x 6	8 x 3,5	3 x 1	10 x 6	10 x 6
Heat transfer	-	-	6 x 4	6 x 4	6 x 4

Washing instruction

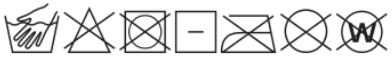

Hand wash/ do not bleach/ do not dry by tumble dryers/ dry flat/ do not iron/ do not dry clean/ do not professional wet clean

Technical Size (cm)

2. 7.2
3. 17.0
4. 17.5
5. 8.2
6. 33.5
7. 9.0
8. 2.0
9. 7.0
10. 9.0

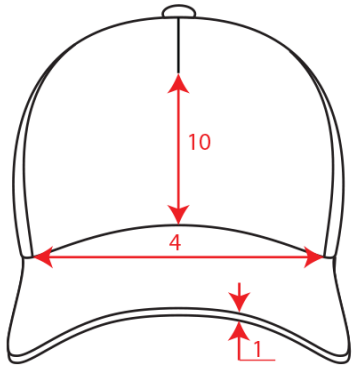

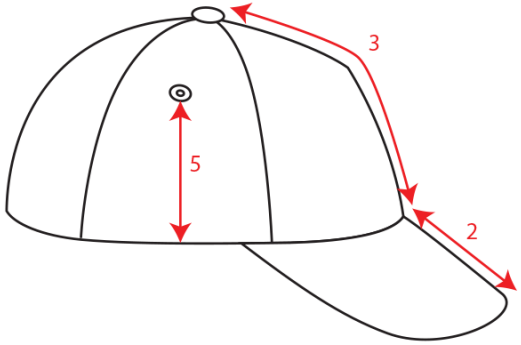

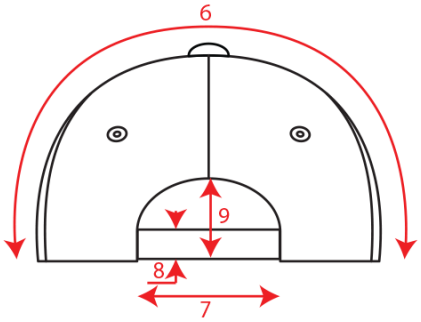

Color variants (TPX / Pantone)

LIGHT-BLUE



SWEATBAND: / -
TAPING: / -
HAT: 15-4319 / 542-C

WHITE



SWEATBAND: / -
TAPING: / -
HAT: 11-0601 / WHITE

YELLOW



SWEATBAND: / -
TAPING: / -
HAT: 14-0957 / 7548-C

GREY

SWEATBAND: / -
TAPING: / -
HAT: 17-1502 / COOL-GREY-8-C

BLACK



SWEATBAND: / -
TAPING: / -
HAT: 19-4006 / BLACK-6-C

NAVY



SWEATBAND: / -
TAPING: / -
HAT: 19-3921 / 296-C

RED



SWEATBAND: / -
TAPING: / -
HAT: 19-1763 / 200-C

ROYAL



SWEATBAND: / -
TAPING: / -
HAT: 19-4027 / 655-C

GREEN



SWEATBAND: / -
TAPING: / -
HAT: 17-6030 / 2418-C