

FIJI

Structured 5 panel baseball cap made of 100% recycled polyester with curved visor and full prostitching. Wide space on the crown for custom patches and hook & loop closure at the back. Fine protection from the sun for summer trekking and outdoor life.

Technical details

Composition: 100% polyester

Fabric: Main Fabric: 100% Recyecled Polyester Twil

Main Fabric Weight: 200 gsm

Packing: 24 x 144

Product Weight Kg: 0,090

Visor: 6 rows / Retraze Recycled Visor

Customs code: 6505.00.30

Eyelets: 6 Sewn eyelets on crown areas

Made in: China

Others: Button

Panels: 5 Panels / full stitching

Size: One size fits all

Circumference: 58-58,5 cm

HOOK&LOOP CLOSURE
Adjustable back closure with hook&loop strap, suitable for any fit.

STRUCTURED FRONT PANEL
Bonded fabric for a structured construction that keeps the shape with a slightly higher crown.

RECYCLED BUCKRAM
Recycled lamination on front panels to maintain the shape with a slightly higher crown.

SELF FABRIC SWEATBAND
Sweatband in same fabric as cap, enhanced by 4 rows on front, closed on back with a tape.

TWILL
Twill is a type of woven textile characterized by diagonal parallel ribs on front.

RECYCLED POLYESTER
Fiber made from polymers obtained by recycling plastic bottles.

Where to customize

Centimeters

	Front	Back	Closure	Right	Left
Print	12 x 6	-	-	6 x 5	6 x 5
Embroidery	12 x 6	12 x 6	3 x 1	10 x 6	10 x 6
Heat transfer	8 x 6	-	-	-	-

Washing instruction

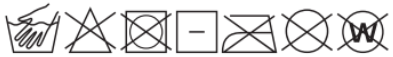

Hand wash/ do not bleach/ do not dry by tumble dryers/ dry flat/ do not iron/ do not dry clean/ do not professional wet clean

Technical Size (cm)

2. 7
3. 16
4. 18
5. 8,5
6. 33
7. 9
8. 2
9. 6,5
10. 8,5

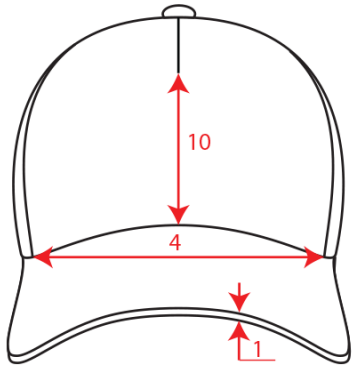

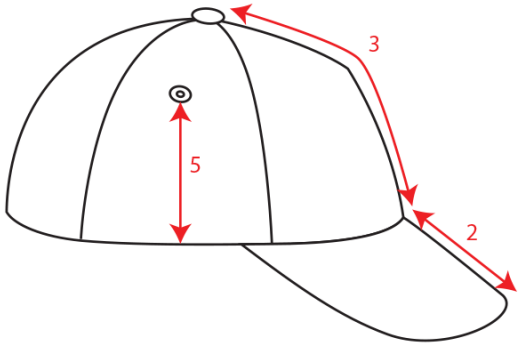

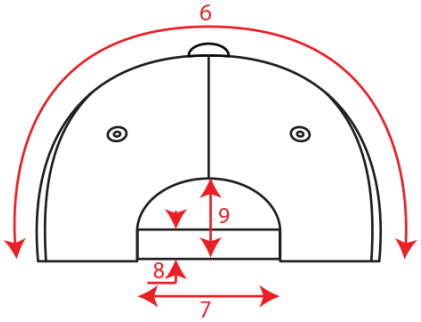

Color variants (TPX / Pantone)

WHITE



SWEATBAND: 11-0601 / WHITE
TAPING: 11-0601 / WHITE
HAT: 11-0601 / WHITE

DARK-GREY



SWEATBAND: 19-3910 / COOL-GREY-11-C
TAPING: 19-3910 / COOL-GREY-11-C
HAT: 19-3910 / COOL-GREY-11-C

KHAKI



SWEATBAND: 15-1213 / 4249-C
TAPING: 15-1213 / 4250-C
HAT: 15-1213 / 4249-C

BLACK



SWEATBAND: 19-4006 / BLACK-6-C
TAPING: 19-4006 / BLACK-6-C
HAT: 19-4006 / BLACK-6-C

NAVY



SWEATBAND: 19-4009 / 533-C
TAPING: 19-4009 / 533-C
HAT: 19-4009 / 533-C

OLIVE



SWEATBAND: 18-0521 / 417-C
TAPING: 18-0521 / 417-C
HAT: 18-0521 / 417-C

RED



SWEATBAND: 19-1762 / 193-C
TAPING: 19-1762 / 193-C
HAT: 19-1762 / 193-C

ROYAL



SWEATBAND: 19-3964 / 3597-C
TAPING: 19-3964 / 3597-C
HAT: 19-3964 / 3597-C

BOTTLE-GREEN



SWEATBAND: 19-4906 / 5535-C
TAPING: 19-4906 / 5535-C
HAT: 19-4906 / 5535-C