

SAND

Featuring a corded miniottoman exterior, SAND is made almost entirely of **breathable recycled polyester**.
The elastane fabric gives a **stretchable universal fit** making this hat completely suitable **for sport and outdoor fun**.

100% POLIESTERE MINIOTTOMAN
Miniottoman fabric mixed with elastane, suitable for sportswear and outdoor outfit.

RECYCLED BUCKRAM
Recycled lamination on front panels to maintain the shape with a slightly higher crown.

RECYCLED POLYESTER
Fiber made from polymers obtained by recycling plastic bottles.

HIGH QUALITY HOOK&LOOP CLOSURE WITH ELASTIC AND PLASTIC BUCKLE
Adjustable back closure made of high quality hook&loop strap with elastic and plastic loop, to enhance the fit.

Retraze Recycled Visor
Internal visor made of 100% recycled plastic (PE), made in partnership with ReTraze®. Starting with the 2024 productions.

Recycled elastic sweatband
Elastic sweatband, made of recycled material.

Technical details

Composition: 95% polyester 5% elastane

Fabric: Main Fabric: 95% recycled polyester twill 5% elastane

Main Fabric Weight: 230 gsm

Packing: 24 x 144

Product Weight Kg: 0,078

Visor: 6 rows / Mid Visor / Retraze Recycled Visor

Customs code: 6505.00.30

Eyelets: 6 Sewn eyelets on crown areas

Made in: China

Others: Button

Panels: 6 Panels / full stitching

Size: One size fits all

Circumference: 58-58,5 cm

Where to customize

Centimeters

	Front	Back	Closure	Right	Left
Print	-	-	6 x 1,2	6 x 5	6 x 5
Embroidery	12 x 6	8 x 3,5	3 x 1	8 x 6	8 x 6
Heat transfer	-	-	-	6 x 4	6 x 4

Washing instruction

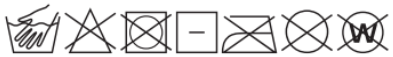

Hand wash/ do not bleach/ do not dry by tumble dryers/ dry flat/ do not iron/ do not dry clean/ do not professional wet clean

Technical Size (cm)

2. 6,8
3. 17
4. 19,5
5. 8,5
6. 33
7. 8,5
8. 2
9. 6

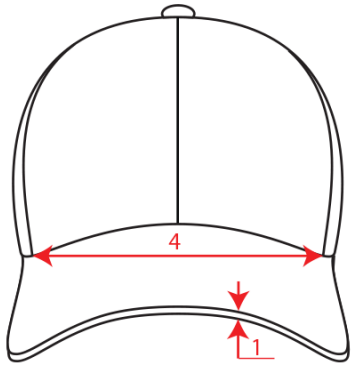

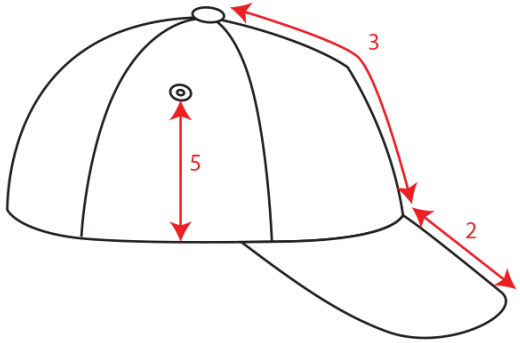

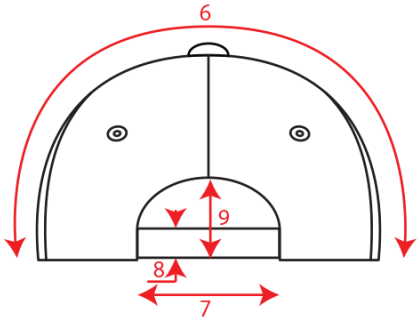

Color variants (TPX / Pantone)

WHITE



SWEATBAND: 11-0601 / WHITE
TAPING: 11-0601 / WHITE
HAT: 11-0601 / WHITE

DARK-GREY



SWEATBAND: 19-4006 / BLACK-6-C
TAPING: 19-3910 / COOL-GREY-11-C
HAT: 18-3907 / 425-C

BLACK



SWEATBAND: 19-4006 / BLACK-6-C
TAPING: 19-4006 / BLACK-6-C
HAT: 19-4005 / BLACK-C

NAVY



SWEATBAND: 19-4006 / BLACK-6-C
TAPING: 19-4009 / 533-C
HAT: 19-3920 / 533-C

ROYAL



SWEATBAND: 19-4006 / BLACK-6-C
TAPING: 19-3964 / 3597-C
HAT: 19-4057 / 7686-C