FRASER



Unstructured 6 panel cap in certified organic cotton. Dad hat shape with mid visor and full metal buckle. Authentic fashion icon of the modern urban culture.

Technical details

Composition: 100% cotton

Fabric: Main Fabric: 100% Organic Cotton twill

Main Fabric Weight: 260 gsm

Panels: 6 Panels / side_and_back stitching

Size: One size fits all

Circumference: 58-58,5 cm

Eyelets: 6 Sewn eyelets on crown areas

Made in: China

Packing: 24 x 144

Product Weight Kg: 0,085

Visor: 8 rows / Mid Visor / Retraze Recycled Visor

Customs code: 6505.00.30

ORGANIC COTTON
Cotton grown using low environmental impact methods and products, without the use of toxic chemical pesticides and fertilisers.

FULL METAL BUCKLE WITH METAL HOLE
Adjustable back closure with a metal buckle, suitable for any fit.

SELF FABRIC SWEATBAND
Sweatband in same fabric as cap, enhanced by 4 rows on front, closed on back with a tape.

GARMENT WASHING
A washing process, made after cap is finished, that enhanches the softness of the fibres.

TWILL
Twill is a type of woven textile characterized by diagonal parallel ribs on front.

Retraze Recycled Visor
Internal visor made of 100% recycled plastic (PE), made in partnership with ReTraze®. Starting with the 2024 productions.

Where to customize

Centimeters

	Front	Back	Closure	Right	Left
Print	6 x 6	-	-	6 x 5	6 x 5
Embroidery	12 x 6	8 x 3,5	6 x 1,2	10 x 6	10 x 6
Heat transfer	-	-	6 x 4	6 x 4	6 x 4

Washing instruction

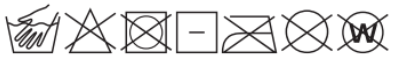

Hand wash/ do not bleach/ do not dry by tumble dryers/ dry flat/ do not iron/ do not dry clean/ do not professional wet clean

Technical Size (cm)

2. 7,0
3. 16,5
4. 19,0
5. 9,0
6. 33,5
7. 8,5
8. 1,8
9. 6

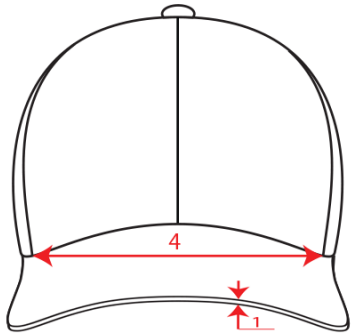

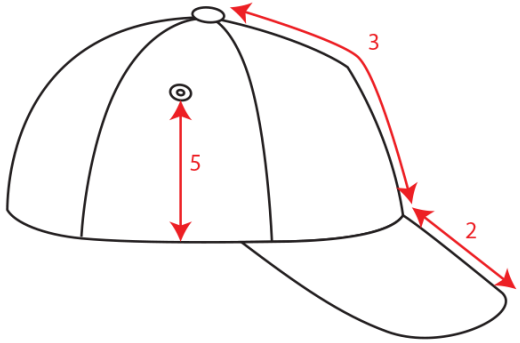

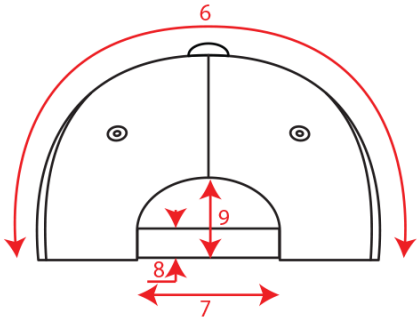

Color variants (TPX / Pantone)

WHITE



SWEATBAND: 11-0601 / WHITE
TAPING: 11-0601 / WHITE
HAT: 11-0601 / WHITE

COLUMBIA-BLUE



SWEATBAND: 16-4121 / 646-C
TAPING: / -
HAT: 16-4121 / 646-C

DARK-GREY



SWEATBAND: 18-3907 / 425-C
TAPING: 19-3910 / COOL-GREY-11-C
HAT: 18-3907 / 425-C

KHAKI



SWEATBAND: 16-1106 / 7530-C
TAPING: 15-1213 / 4250-C
HAT: 16-1106 / 7530-C

BLACK



SWEATBAND: 19-4005 / BLACK-C
TAPING: 19-4006 / BLACK-6-C
HAT: 19-4005 / BLACK-C

NAVY



SWEATBAND: 19-4009 / 539-C
TAPING: 19-4009 / 533-C
HAT: 19-4009 / 539-C

OLIVE



SWEATBAND: 18-0521 / 417-C
TAPING: 18-0521 / 417-C
HAT: 18-0521 / 417-C

RED



SWEATBAND: 19-1763 / 200-C
TAPING: 19-1762 / 193-C
HAT: 19-1763 / 200-C

CARDINAL-RED



SWEATBAND: 19-1652 / 194-C
TAPING: 19-1652 / 194-C
HAT: 19-1652 / 194-C

PINK



SWEATBAND: 15-1717 / 3572-C
TAPING: / -
HAT: 15-1717 / 3572-C

STONE



SWEATBAND: 13-0404 / 4267-C
TAPING: / -
HAT: 13-0401 / 4755-C